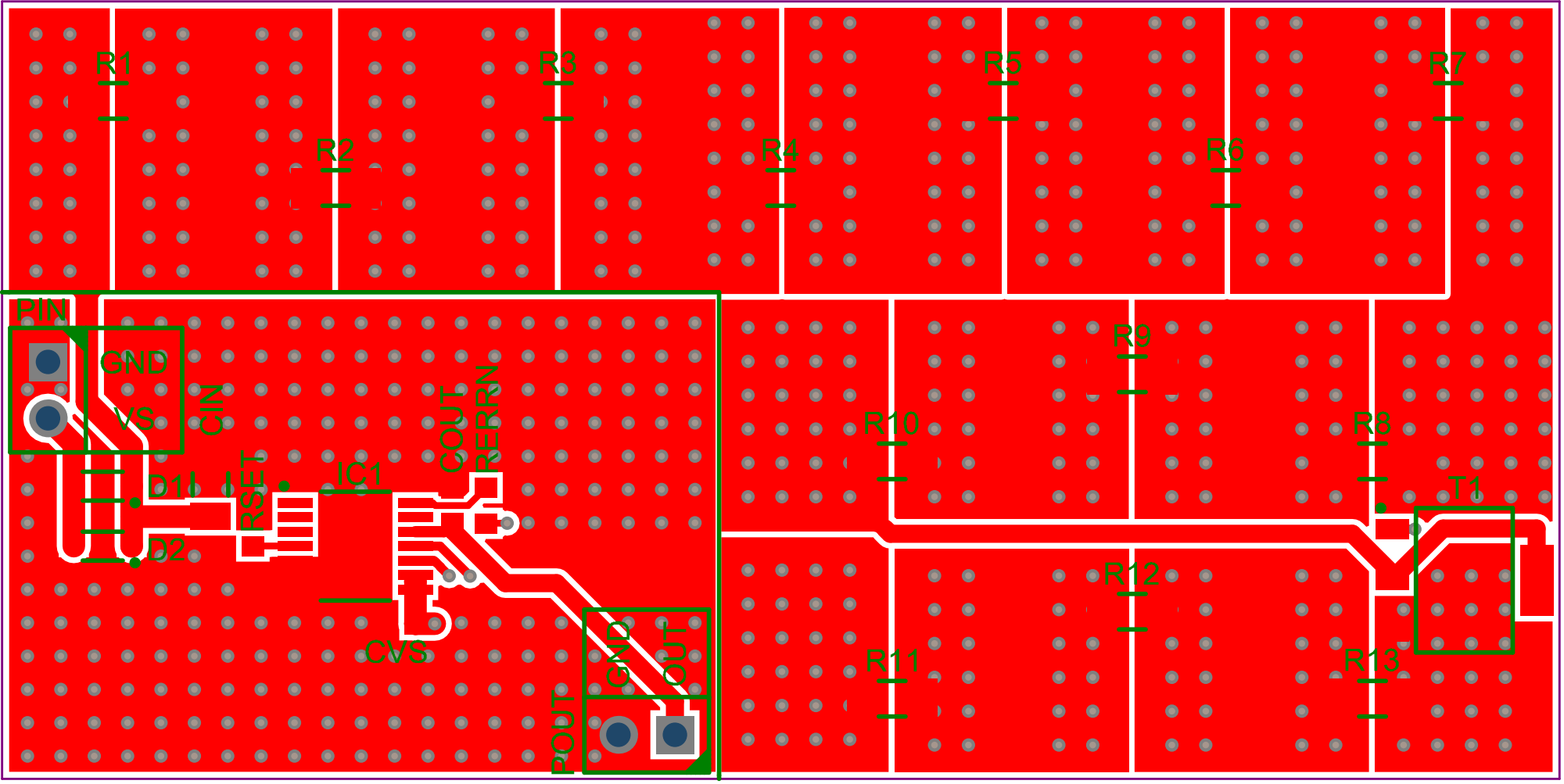
R1
R2
R3
R4
R5
R6
R7
R8
R9
R10
R11
R12
R13
T1
PIN
GND
VS
CIN
D1
D2
RSET
IC1
COUT
RERRN
CVS
GND
OUT
ROUT

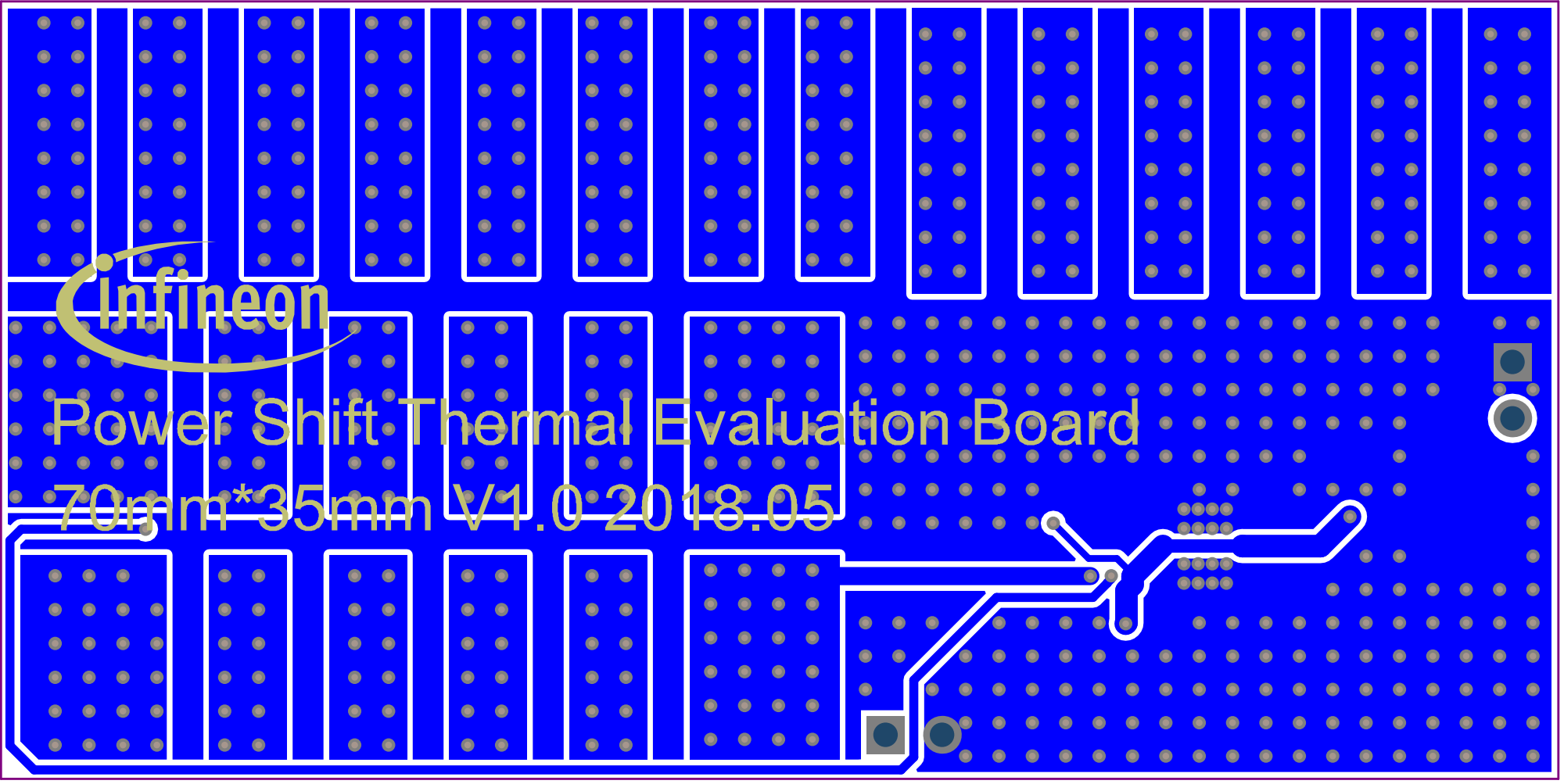
Infineon
Power Shift Thermal Evaluation Board
70mm*35mm V1.0 2018.05